TC 3-22.6

GUARD DUTY

JANUARY 2017

Headquarters, Department of the Army

DISTRIBUTION RESTRICTION: Approved for public release; distribution is unlimited.

*This publication supersedes FM 22-6, date 17 September 1971.

This publication is available at the Army Publishing Directorate site (http://www.apd.army.mil), and the Central Army Registry site (https://atiam.train.army.mil/catalog/dashboard)

Training Circular
No. 3-22.6 (FM 22-6)

Headquarters
Department of the Army
Washington, D.C., 13 January 2017

Guard Duty

Contents

		Page
	PREFACE	**iii**
Chapter 1	**GENERAL**	**1-1**
	Orders and General Orders	1-1
	Composition of the Guard Force	1-1
	Duty Descriptions	1-2
Chapter 2	**GUARD ORDERS**	**2-1**
	General Orders	2-1
	Special Orders	2-3
	Recitation of Orders when Inspected by an Officer/NCO	2-4
Chapter 3	**INTERIOR GUARD**	**3-1**
	Main Guard	3-1
	Duties of Personnel	3-1
	Staff Duty	3-5
	Special Guard	3-6
Chapter 4	**EXTERIOR GUARD**	**4-1**
	Composition	4-1
	Responsibilities	4-1
	Guard in Hybrid Threat Areas	4-1
Chapter 5	**GUARD MOUNTING**	**5-1**
	General	5-1
	Guard Mount (Inspection Only)	5-1
	Formal Guard Mount	5-3
	Designation of the Guard Chain of Command	5-5
	Formal Relief of the Old Guard	5-7
	Formal Presentation of New and Old Guards	5-8
	Formal Posting of Reliefs	5-9
Appendix A	**ESCALATION OF FORCE**	**A-1**
Appendix B	**COUNTERSIGNS AND PAROLE WORDS**	**B-1**
Appendix C	**CHALLENGE AND PASSWORD**	**C-1**

Distribution Restriction: Approved for public release; distribution is unlimited.

***This publication supersedes FM 22-6, dated 17 September 1971.**

Appendix D DETAILS AND ROSTERS D-1
Glossary Glossary-1
References References-1
Index Index-1

Figures

Figure 1-1. General breakdown of the interior guard 1-2
Figure 5-1. Formation of the guard 5-2
Figure 5-2. Marching to the center 5-4
Figure 5-3. Designation of the guard chain of command 5-5
Figure 5-4. Return to posts 5-6
Figure 5-5. Formation of the guard at the guardhouse 5-8
Figure 5-6. Posting guards 5-10
Figure 5-7. Posting and relieving guards (step one) 5-11
Figure 5-8. Posting and relieving guards (step 2) 5-12
Figure 5-9. Posting and relieving guards (step 3) 5-13

Preface

This training circular (TC) provides all Soldiers the doctrinal basis for the detailing, and performance of guard duty. This TC is not intended to serve as a stand-alone publication. It should be used with other Army publications that contain more in-depth information.

For the purpose of this TC, the term *guardhouse* refers to any building or area in which the guard will be housed when not physically at a guard post.

For ease in distinguishing a preparatory command from a command of execution, the commands of execution appear in **BOLD CAP** letters and preparatory commands appear in *italic* letters.

The principal audience for this publication includes individual Soldiers and leaders throughout the Army.

Commanders, staffs, and subordinates ensure that their decisions and actions comply with applicable United States, international, and in some cases host-nation laws and regulations. Commanders at all levels ensure that their Soldiers operate in accordance with the law of war and the rules of engagement. (Refer to FM 27-10 for more information.)

This manual applies to the Regular Army, the Army National Guard (ARNG)/National Guard of the United States (ARNGUS), and the U.S. Army Reserve (USAR) unless otherwise stated.

Unless this publication states otherwise, masculine nouns and pronouns refer to both men and women.

The proponent for this publication is the U.S. Army Training and Doctrine Command (TRADOC). The preparing agency is the U.S. Army Maneuver Center of Excellence (MCoE). Send comments and recommendations by any means, U.S. mail, e-mail, fax, or telephone, using the format of DA Form 2028, *Recommended Changes to Publications and Blank Forms*. Point of contact information is as follows.

E-mail:	usarmy.benning.mcoe.mbx.doctrine@mail.mil
Phone:	COM 706-545-7114 or DSN 835-7114
Fax:	COM 706-545-8511 or DSN 835-8511
U.S. Mail:	Commander, MCoE Directorate of Training and Doctrine (DOTD) Doctrine and Collective Training Division ATTN: ATZB-TDD Fort Benning, GA 31905-5410

Introduction

This manual is for personnel concerned with the organization and functions of interior and exterior guard. It includes orders, countersigns, parole words, and the responsibility of the main guard including duties of personnel and the formal method of mounting the guard. The manual also discusses the duties and composition of special guards.

This manual is a guide, and because all possible situations and eventualities cannot be foreseen or covered by the manual, great reliance must be placed upon the application of sound judgment by all members of a guard and by all security personnel, which ultimately leads to the ethical application of force when warranted. In situations not covered by this manual and where doubt arises as to the proper action to be taken, as an Army professional, the individual must consider the mission, their orders and apply sound judgment in making the required decision(s).

Chapter 1
General

Guard duty is a fundamental task performed by all Soldiers and leaders in order to protect the force. Simple and effective procedures that are known, understood and practiced by all personnel are vital to the execution of guard duty. This manual outlines the procedures that are requisite in the performance of guard duty.

ORDERS AND GENERAL ORDERS

1-1. A guard on post is governed by two types of orders: general orders and special orders. General orders outline the fundamental responsibilities of a guard while special orders instruct the Soldier in the actual performance of his/her duty while on a particular post.

1-2. All guards are required to memorize, understand, and comply with the following general orders:

- **No. 1**. I will guard everything within the limits of my post and quit my post only when properly relieved.
- **No. 2.** I will obey my special orders and perform all my duties in a military manner.
- **No. 3.** I will report violations of my special orders, emergencies, and anything not covered in my instruction, to the Commander of the Relief.

1-3. Guards on post also are governed by their special orders. These orders are specific to each guard post and include everything not covered by the general orders. The special orders are based on the current situation, as well as, the sensitivity of the site being protected. Special orders are updated as frequently as the situation dictates.

1-4. A guard's special orders will dictate the security posture of the guard and the appropriate protective gear that will be worn by the guard. It will also dictate the how the guard will carry his/her weapon. For example, a guard assigned to an ammunition holding area during a heightened security alert may be required to wear full body armor and carry his weapon at the low ready.

COMPOSITION OF THE GUARD FORCE

1-5. The guard force may consist of an interior guard, an exterior guard, or a combination of both. The interior guard guards everything from the perimeter of the installation or area of responsibility inward. The exterior guard guards all areas outside the installation that can influence the installation. Guard forces may be augmented by remotely operated cameras or unmanned sensors. The use of unmanned or remote sensors may alleviate the need for some, but not all, manning requirements of a guard force.

INTERIOR GUARD

1-6. An interior guard is detailed by Commanders of military installations to protect property and enforce specific military regulations. Installation Commanders are responsible for the interior guard and prescribing the composition of the guard. When brigades and separate units are responsible for an interior guard within their own areas, their composition, duties and responsibilities are similar to those outlined in this publication. Unit Commanders furnishing personnel for guard are responsible to ensure that these personnel are qualified or familiar with the weapon and equipment used on guard. The elements of an interior guard are classified according to their purpose. They include the main guard and special guards. The main guard consists of a combination of patrols and fixed posts. Special guards are used to protect sensitive area and equipment that is impractical for the main guard to protect. Figure 1-1 shows the general breakdown of the interior guard.

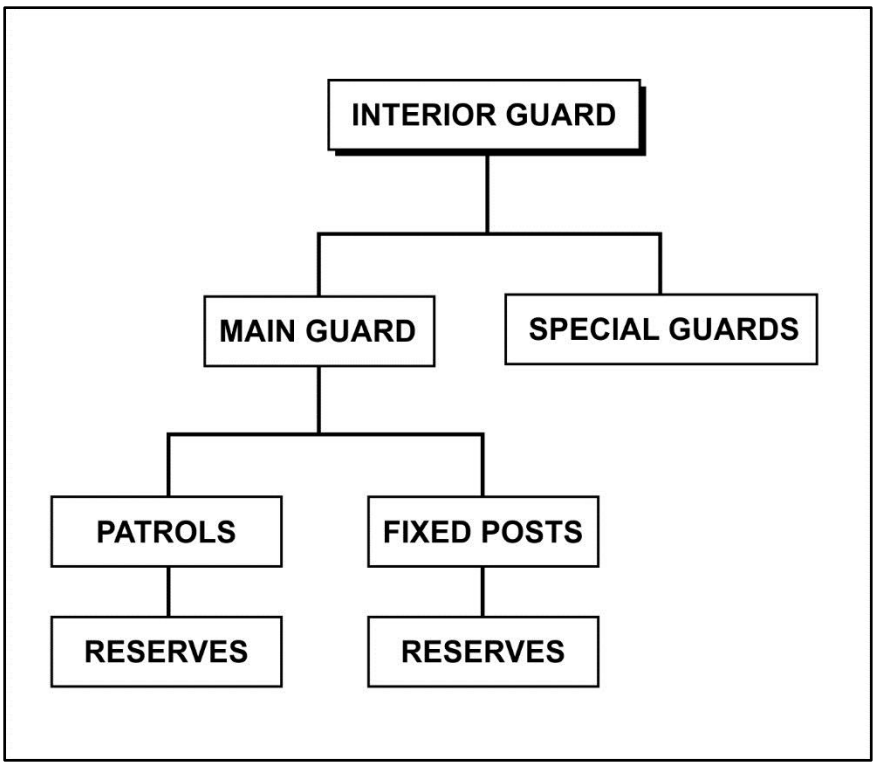

Figure 1-1. General breakdown of the interior guard

EXTERIOR GUARD

1-7. Exterior guard is a term used to classify those guards outside of a military installation, guards in a combat area, guards in hostile or unfriendly territory, and guards (located anywhere) who have to perform their duties in such a manner that the general orders prescribed for interior guard are not applicable or practical. The duties and responsibilities of exterior guards are different from those for interior guards. Exterior guard is not as formal and restricted as interior guard. Lookouts, listening posts, outposts, specifically designated patrols, and other guards in combat zones, and guards outside the limits of a military installation are classified as exterior guards. Exterior guards perform their duties as prescribed by special orders and instructions

DUTY DESCRIPTIONS

1-8. The guard force has a defined chain of command. This ensures that the guards know who is authorized to challenge and inspect the guard force and to maintain security of the area being guarded. The guard force chain of command may be different from a Soldier's unit chain of command as the guard force may be composed of Soldiers from many different units. When Soldiers are detailed to the guard force, their primary chain of command is the guard force.

COMMANDING OFFICER (CO)

1-9. The Commanding Officer is the officer commanding an installation, organization, unit, or garrison.

FIELD OFFICER OF THE DAY (FOD)

1-10. The Field Officer of the Day is a field grade officer detailed as the personal representative of the Commanding Officer. During his tour of duty he is responsible to the Commanding Officer for the security of the installation or activity and other duties as may be assigned depending upon local directives. This duty is normally performed at the division level or higher.

OFFICER OF THE DAY (OD)

1-11. The Officer of the Day is an officer, acting directly under the Commanding Officer or Field Officer of the Day, who is responsible on a given day for the execution of all orders of the Commanding Officer relating to guard duty and any other assigned duties

STAFF DUTY OFFICER (SDO)

1-12. The Staff Duty Officer (SDO) is an officer, acting as the appointed representative of the Commander when the Commander is not present or after the end of the duty day. The SDO is responsible for executing all orders given by the Commander as well as the security within his area of responsibility. This duty normally is performed at the brigade and battalion level.

COMMANDER OF THE GUARD (COG)

1-13. The Commander of the Guard is the senior officer or noncommissioned officer (NCO) of the guard, next junior to the Officer of the Day. He is responsible for the instruction, discipline, and performance of duty of the guard.

STAFF DUTY NONCOMMISSIONED OFFICER (SDNCO)

1-14. The Staff Duty Noncommissioned Officer (SDNCO) is the appointed representative of the command sergeant major and assistant to the SDO. The SDNCO is responsible for the conduct of the charge of quarters (CQ) (if assigned) and the good order and discipline of the area in the absence of the command sergeant major. The SDNCO assists the SDO in maintaining security of the unit area.

SERGEANT OF THE GUARD (SOG)

1-15. The Sergeant of the Guard (SoG) is the senior NCO of the guard. He supervises the enlisted members of the guard and is responsible to the Commander of the Guard. The SoG will normally remain at the guardhouse or command post unless he/she is inspecting the guard or an emergency situation arises.

COMMANDER(S) OF THE RELIEF (COR)

1-16. The Commander of the Relief is the next senior NCO of the guard. The CoR is responsible for the performance of all guards in their relief for the duration of the relief's tour of duty. The CoR will inspect each guard frequently to ensure that the guard is performing his/her duties and ensure the well-being of each guard. The CoR is responsible to the Sergeant of the Guard.

RELIEF

1-17. A relief is an individual guard or group of guards that are assigned to perform guard duty. The length of the guard duty assignment and the personnel available will determine the number of reliefs. For example, a guard assignment at an entry control point that lasts for 24 hours a day will typically have three reliefs, one relief will be at their guard posts and the other two reliefs will be at the guardhouse or as detailed in the special orders.

GUARD

1-18. A guard is an individual responsible to keep watch over, protect, shield, defend, warn, or other duties prescribed by general orders and special orders. Also referred to as a sentry, or lookout.

1-19. The term "guard" also can be used to describe a special unit responsible to the Officer of the Day for the protection of and security of an installation or area. This unit includes a Commander of the Guard, SoG, Commanders of the Relief, and guard.

This page intentionally left blank.

Chapter 2

Guard Orders

General orders for both interior and exterior guards must be supplemented by realistic, detailed, and mission-oriented special orders carefully tailored for the specific post and situation from the viewpoint of security and guard effectiveness and protection. The special orders for each post must be reviewed frequently to ensure they do not become obsolete. A special order may be added to a guard post for a specific period to cover a certain situation and deleted at the end of a specified period, or on a certain date.

GENERAL ORDERS

NO. 1. I WILL GUARD EVERYTHING WITHIN THE LIMITS OF MY POST AND QUIT MY POST ONLY WHEN PROPERLY RELIEVED.

2-1. Guards are responsible for everything that occurs within the limits of their post while they are on duty. They also are responsible for all equipment and property located within the limits of their post. The exact limits of their post are defined by special orders. The special orders also should include every place guards must go to perform their duties.

2-2. Guards immediately investigate every unusual or suspicious occurrence on or near their post provided they do not have to leave their guard post. If necessary, the guard contacts the Commander of the Relief for instructions.

2-3. Guards apprehend all suspicious individuals and all individuals involved in a disturbance occurring on or near their post. In apprehending persons, the guard uses only necessary force to overcome any resistance. (Refer to appendix A of this publication for more information.) Apprehension of individuals should be included in special orders or guard instructions. All individuals apprehended are turned over to the Commander of the Relief or the proper authorities as stated in their special orders. Apprehension authority is described under Article 7, *Uniform Code of Military Justice*. (Refer to MISC PUB 27-7, *Manual for Courts-Martial United States (2012 Edition)*, 5 April 2012 for more information.)

2-4. All individuals, regardless of rank, are required to respect members of the guard in the performance of their duties.

2-5. Guards remain on post and continue performing all duties required on that post until they are relieved by proper authority.

2-6. If a guard requires relief because of sickness or for any other reason, the guard notifies the Commander of the Relief and will wait until he/she is replaced by another guard or has permission from the guard chain of command to leave the guard post.

2-7. If a guard is not relieved at the end of his tour of duty, he/she does not abandon the guard post. The guard will contact the Commander of the Relief for instructions.

2-8. Guards leave their posts for meals as specifically directed by the guard chain of command. This can be accomplished by arranging for early and late meals for guards going on and coming off duty.

2-9. When authorized by the guard chain of command, or prescribed in the special orders, a guard on the last relief of a post may be directed to leave the guard post at the proper time and return to the guardhouse where he/she reports to the Commander of the Relief on duty.

NO. 2. I WILL OBEY MY SPECIAL ORDERS AND PERFORM ALL MY DUTIES IN A MILITARY MANNER.

2-10. Guards familiarize themselves with the special orders for their guard post prior to being posted. The guard obeys, executes, and enforces all special orders pertaining to that particular post.

Note. The Commander of the Relief is responsible for ensuring that all guards understand their special instructions prior to being posted.

2-11. In addition to his special orders, a guard is responsible to obey and carry out any orders or instructions from the Commanding Officer, Field Officer of the Day, and officers and NCOs of the guard. No other individuals are authorized to give a guard orders or instructions. Any special instructions for a guard should be issued through the guard's chain of command.

2-12. Guards on post relay instructions to their relief when appropriate. The information also is given to the Commander of the Relief.

Example

A guard on duty at an ammunition supply point discovers a hole in the fence during his tour of duty. Upon finding the hole, the guard notifies the Commander of the Relief. The guard passes this information to his relief so that special attention can be paid to that portion of the fence until the hole is repaired.

2-13. The guard performs their duties in a military manner and serves as an example to others.

2-14. The guard is courteous to everyone. He only speaks in the line of duty. When individuals make proper inquiries of a guard, he answers them in a courteous manner.

2-15. The guard on an interior guard post maintains a professional bearing. The weapon is carried in a manner prescribed by the Commanding Officer or Commander of the Guard.

2-16. Guards on post salute individuals as prescribed in AR 600-25 *Salutes, Honors and Visits of Courtesy* and in accordance with the appropriate manual of arms prescribed TC 3-21.5 *Drill and Ceremony*. A guard talking with an officer does not interrupt the conversation to salute another officer; however, if the officer salutes a senior officer, the guard also salutes. No salute is given by a guard who is engaged in a specific duty which prevents saluting.

2-17. When formally challenging, a guard, armed with a rifle, carbine, or shotgun challenges from the position of port arms as described in TC 3-21.5 *Drill and Ceremony*. If armed with a pistol the guard challenges from the position of "raise pistol" as described in TC 3-21.5 *Drill and Ceremony*. After challenging, a guard remains in the challenge position until the individual challenged is allowed to pass, depart, or is turned over to the Commander of the Relief.

2-18. When challenging in a field or tactical environment, the guard's weapon will be presented in a manner which will afford the guard with the greatest amount of protection. The weapons posture and method of presentation will be based on the current threat level, the sensitivity or the area or equipment being guarded and will be outlined in detail in the guard's special orders.

2-19. Guards on posts requiring challenging will not render salutes. The special orders specify the time for challenging.

Note. The guard's primary mission is to guard his post. Requiring salutes places the guard in a vulnerable position. However, the guard displays all other military courtesy and respect while in conversation with an officer.

2-20. During the guard's tour of duty he/she is required to execute orders of no one but the Commanding Officer, Field Officer of the Day, Officer of the Day, and officer of the guard; however, any officer may investigate apparent violations of regulations by members of the guard.

In the event of an inspecting officer, or any other person in the military service, finding an irresponsible guard on post, it is their duty to notify the Commander of the Guard or an NCO of the guard and stay on the post until a qualified guard is posted. Following notification, the inspecting personnel will ensure that the guard post is manned by either themselves or by assigning someone to it. At no time will the guard post be left unmanned unless authorized by the Commander of the Guard.

2-21. The guard surrenders their weapon only when ordered to by the guard chain of command. These individuals should not order a guard to surrender his weapon for inspection or any other purpose unless an emergency exists.

NO. 3. I WILL REPORT VIOLATIONS OF MY SPECIAL ORDERS, EMERGENCIES, AND ANYTHING NOT COVERED IN MY INSTRUCTIONS TO THE COMMANDER OF THE RELIEF.

2-22. The guard will report all violations of their special orders to the Commander of the Relief. If necessary the guard will apprehend the offender. See appendix A for use of force guidance.

2-23. The guard will report all emergencies that occur on or near their post. The guard takes whatever action is prescribed by his/her special orders or guard instructions. Anytime the guard is in doubt as to what action to take, or it is not covered in the special orders, the guard will call the Commander of the Relief for instructions or assistance.

2-24. In case of fire, occurring on or near his post, the guard will call 911 or emergency services. The guard will alert the occupants if it is an occupied building. He/she will give the alarm or ensure one has been given. The guard will direct the firefighting personnel to the fire and notify the guardhouse as soon as possible.

2-25. The guard will report any disorder occurring on or near their post. The guard takes action as prescribed in their special orders. If assistance is required, the guard will call the Commander of the Relief.

2-26. If the danger is great, the guard will use a predetermined emergency signal. Emergency signals will be outlined in the special orders. When instructed to do so, guards give warnings of air, chemical, biological, radiological and nuclear (CBRN), and other attacks. Guards should receive special training if they are to act as CBRN guards.

SPECIAL ORDERS

2-27. Special orders are established by the Commanding Officer and differ for various posts depending upon the nature of the area being guarded. They are based on the following considerations:

REALISM

2-28. Special orders are designed for a particular post, since two posts on an installation are seldom identical. The orders for each post are devised to provide increased protection for the guard concerned by locating him behind natural or man-made obstacles which make surprise difficult. This calls for flexible and imaginative planning when developing special orders.

CLARITY

2-29. Special orders should be understood clearly by the guard on post. The Commander of the Relief clarifies their meaning before posting a guard. The Commanding Officer is responsible for updating the special orders and immediately publishes any changes.

2-30. Copies of special orders are continuously and conspicuously posted in the guardhouse for reference. A copy of the special orders may be posted on a fixed post or the guard may be required to carry a copy of the special orders with him while on duty. The special orders for each guard post

should explain or diagram the post location, boundaries, and any particular orders for the post, including those conditions under which force may be used.

2-31. Additional special orders received by a guard before going on duty and while on post are passed on to the guard who relieves him. These additional orders may be written or oral.

RECITATION OF ORDERS WHEN INSPECTED BY AN OFFICER/NCO

2-32. When a guard is asked by an inspecting officer, "What are your orders?" the proper answer is: "Sir (Sergeant), my orders are of two classes, general and special. My general orders are: No. 1: I will guard everything within the limits of my post and quit my post only when properly relieved. No. 2: . . .," and the guard will continue to recite their general orders until they are stopped by the officer or NCO or until they have recited all of their general orders. The guard should be able to answer any questions pertaining to the special orders for the post.

Chapter 3

Interior Guard

The Commander of the installation has the authority to detail the interior guard force. The elements of mission, enemy, terrain and weather, troops and support available, time available and civil considerations (METT-TC) are usually the factors used in determining the size of the interior guard force to be detailed. From Army installations in CONUS environments to outposts in deployed areas, as long as there is a need to maintain security of personnel and equipment, the Commander needs an interior guard

MAIN GUARD

3-1. The main guard of the installation is the Commander's primary means of enforcing federal, state, and local law as well as Army regulations and local policies. The main guard force on military installations is overseen by Department of Emergency Services (DES). The Provost Marshal, and the military police and contracted Department of Defense security officers all serve as part of the main guard. The main guard may be augmented by Soldiers from resident units when authorized by the installation Commander based on the current situation.

3-2. The main guard consists of patrols, fixed posts, and a reserve. Either patrols or fixed posts, or a combination of the two, may be used. In any case, the main guard maintains a reserve. Brigades and separate units use of a staff duty or charge of quarters to perform guard duties when they are responsible for their own areas.

3-3. When directed by the Commander, the main guard consists of one Officer of the Day; one or more Commanders of the guard; one or more SoGs; a relief Commander for each relief; and the necessary number of guards. The number of guards needed for routine daytime duty is ordinarily much larger than the number required at night or on Sundays and holidays due to an increase in activity. When it is necessary to have increased supervision and control of a relief, an assistant Commander of the Guard and an assistant SoG may be detailed.

3-4. The staff duty normally consists of the SDO, SDNCO, and as many staff duty runners as required by the unit standard operating procedures (SOP). The staff duty reports to the unit chain of command as well as the Officer of the Day (if applicable).

3-5. Guards are armed and equipped according to the orders of the Commander or his representative, based upon the determined risk level. Rifles, pistols, shotguns, riot clubs, or other weapons are used when appropriate. Guards must be qualified to use the weapon with which they are armed. In the event that a guard is unqualified with their individual weapon, the Commanding Officer may authorize the guard to be armed with a weapon that he/she is familiar with.

3-6. All instructions that are not covered in the general orders, including uniform and weapons posture, will be covered in the special orders for that guard post.

3-7. Guards cover their posts on foot, in motor vehicles, or by other types of transportation; however, the exact method is prescribed by the Commanding Officer and will be outlined in the special orders.

DUTIES OF PERSONNEL

3-8. Within the organization of a guard detail, there are various types of personnel and each has separate duties related to the overall function of the organization.

COMMANDING OFFICER (CO)

3-9. The Commanding Officer details a guard large enough to provide for the security of personnel, government property, and buildings within their jurisdiction. The Commander requires a vigilant and thorough performance of guard duty. The Commanding Officer gives his orders, or has them given by his representative, to the Officer of the Day and prescribes regulations and special orders for the guard.

3-10. At a designated time and place each day, the Commanding Officer, or his representative, receives the reports of the officers of the day. He, or his representative, examines the guard report, relieves the old Officer of the Day, and gives the new Officer of the Day their instructions.

FIELD OFFICER OF THE DAY (FOD)

3-11. A field grade officer is detailed as Field Officer of the Day (FOD). During the FOD's tour of duty he is the Commanding Officer's personal representative.

3-12. The tour begins when the FOD reports to the Commanding Officer or their representative for duty and terminates when he/she is relieved by the same authority. The usual tour of duty for the FOD is 24 hours.

3-13. The FOD is assigned various duties pertaining to the security of the command depending upon local directives. One of these duties is supervising the interior guard and parallels closely the responsibilities of the Officer of the Day. The FOD's primary concern, as a supervisor, is to see that the guard performs its assigned tasks. This duty usually is performed at division and higher levels.

OFFICER OF THE DAY (OD)

3-14. The Officer of the Day is responsible for the proper performance of duty by the main guard and, when so directed, for special guards. The Officer of the Day is charged with executing all orders of the Commanding Officer relating to guard duty. This duty is usually performed at the division level and higher.

3-15. The OD's tour begins when he receives the instructions of the Commanding Officer and ends when he/she is relieved by the same authority. The usual tour for the OD is 24 hours.

3-16. In the absence of special instructions from the Commanding Officer, the Officer of the Day inspects the guard and guards on post as often during the day and night as he/she considers necessary; however, the OD should inspect them at least once between midnight and daylight.

3-17. Some of the other duties that the Officer of the Day performs include but are not limited to:

- Directing the Commander of the Guard and NCOs of the guard to inspect the guards on post when necessary.
- Acting immediately to protect life and government property and to preserve order in case of alarm. If necessary, he/she tasks the guard to assist.
- Signing the guard report, adding their own remarks to it, and submitting it to the Commanding Officer daily.
- Keeping the guard informed of his/her location at all times.
- Having oversight of any staff duty in his/her assigned area.
- Conducting a joint inventory of property with the old Officer of the Day to determine the presence and serviceability of the guard property.

3-18. In the performance of their duties, the OD takes orders only from the Commanding Officer or Field Officer of the Day. However, during an emergency, when there is great danger, the on scene Commander may give orders to the Officer of the Day for the use of the guard.

COMMANDER OF THE GUARD (COG)

3-19. The Commander of the Guard is responsible for the instruction, discipline, and performance of the guard. The CoG is also responsible for the security of ammunition and weapons of the guard.

3-20. The Commander of the Guard obeys the orders of the Commanding Officer, Field Officer of the Day, and Officer of the Day. The CoG reports to the Officer of the Day any additional orders given to the guard

by themselves or other authorized persons. The CoG gives their successor all of the instructions and information about their duties.

3-21. The Commander of the Guard ensures that all members of the guard understand their orders and perform their duties as directed. He/she questions all members of the guard about the instructions they have received, including the use of the countersign.

3-22. The Commander of the Guard inspects the guard as directed by the Officer of the Day. They perform inspections to ensure all guards are performing their duties. They assure themselves that the Soldiers, their weapons, and their equipment are in proper condition. For inspections by other officers, the Commander of the Guard prepares the guard as directed by the inspecting officer. The CoG inspects each relief daily while he/she is at their guard post and as often as ordered and makes at least one of these visits between midnight and daylight. The Commander of the Guard ensures that the special orders for each post and member of the guard are posted in the guardhouse, and, if practical, at each guard post.

3-23. When both old and new guards are at the guardhouse, the Commander of the Guard who is senior in rank is responsible for proper actions in case of emergency.

3-24. When the Commander of the Guard leaves the guardhouse, he/she informs the next subordinate in command and the Commander of the Relief on guard of their destination and estimated time of return. Except in emergencies, the Commander of the Guard may split night duty with the next in command; however, the Commander of the Guard retains their responsibility.

3-25. When an alarm is raised, the Commander of the Guard forms the reserve as soon as possible. If the situation is serious the CoG notifies both the Officer of the Day and Commanding Officer.

3-26. In addition to the above duties the Commander of the Guard also:

- Ensures all guards are relieved on time.
- Decides to permit members of the guard to leave the guardhouse when not at a guard post. This does not include the reserve.
- Holds all individuals apprehended or taken into custody by members of the guard at the guardhouse. He notifies proper authorities and Officer of the Day. Actions to take upon apprehending individuals will be addressed in the special orders for the guard.
- Ensures that any individual, who has been apprehended by the guard, has been searched for unauthorized articles. The Commander of the Guard reports the facts the proper authorities and to the Officer of the Day immediately.
- Prepares the guard report and presents it to the Officer of the Day daily.
- Prescribes the duties of the assistant Commander of the Guard when such an officer is assigned.

SERGEANT OF THE GUARD (SOG)

3-27. The Sergeant of the Guard (SoG) is the senior NCO of the guard. He performs the duties and assumes the responsibilities of the Commander of the Guard, if there has been no officer so detailed. The SoG:

- Supervises the other enlisted Soldiers of the guard, and is familiar with their orders and duties.
- Ensures that the property of the guard is properly cared for.
- Posts the approved policies of the guardhouse.
- Reports to the Commander of the Guard anything suspicious or unusual and notifies them of all individuals apprehended by the guard.
- Forms the guard whenever necessary.
- Ensures all reliefs are posted at the proper time.
- Checks to see that the relief Commanders understand their duties thoroughly and carry them out promptly and efficiently.
- Ensures that other NCOs of the guard inspect the guard as prescribed.

3-28. Each day the SoG prepares duplicate lists of the names of the NCOs and guards of the guards, showing the reliefs and posts or duties of each. He/she keeps one list and gives the other to the CoG.

3-29. When the SoG is absent temporarily from the guard house, he/she directs the Commander of the Relief on duty to act as SoG.

3-30. If the Commander of the Relief, whose relief is on guard, is called away from the guardhouse, the SoG replaces them temporarily or appoints another NCO to carry out the duties of the absent relief Commander.

COMMANDER OF THE RELIEF (COR)

3-31. CoRs are the next senior NCOs of the guard. They receive and obey orders only from the Commanding Officer, Field Officer of the Day, Officer of the Day, Commander of the Guard, and the SoG.

3-32. Each Commander of the Relief assigns the members of their relief to their guard posts. These assignments can be changed only by the Commander of the Guard or higher authority.

3-33. Each CoR makes two copies of the list of the members of his/her relief, including themselves on a daily basis. The CoR gives one copy to the SoG and keeps the other. This list shows the number of the relief, the guard post to which each member is assigned, and the member's name and organization.

3-34. The Commander of the Relief instructs the guards as to their orders and duties and ensures that each guard understands them. The CoR familiarizes themselves with the special duties of every guard in his relief.

3-35. At least one NCO is constantly alert at the guardhouse, usually the CoR whose soldiers are on guard. This NCO takes their post (as prescribed) in the guardhouse. The CoR keeps their weapon with them at all times. When necessary for the CoR to leave the guard post, they notify the SoG, who takes their place or designates another NCO to do so. The CoR ensures that no one enters the guardhouse without authority.

3-36. The Commander of the Relief:

- Goes immediately to any guard who calls for the CoR.
- Ensures that tents or bunks for his guards are located close together so that they can find all the members of their relief and post them quickly and without confusion.
- Awakes the Commander whose relief is next on guard in time to form and post the guards at the proper hour.
- Challenges all suspicious people he/she may observe during times of limited visibility or when conditions degrade the ability of the guard to positively identify authorized personnel. The CoR advances them using the method described for guards on post. (For more information refer to appendix B of this publication.)
- Examines individuals halted and detained by a guard. If the Commander of the Relief doubts their authority to be there, he/she will take them to the SoG or the CoG.
- Apprehends all suspicious individuals, disturbers of the peace, and individuals caught, or suspected of committing a crime. Individuals apprehended by the Commander of the Relief or by guards are taken to the Commander of the Guard at once.
- Reports all violations of regulations and unusual occurrences to the SoG immediately.

GUARDS

3-37. Privates and specialists are normally assigned guard posts. NCOs may be assigned to guard posts at the discretion of the Commanding Officer.

3-38. Guards are assigned to reliefs by the SoG and to guard posts by the Commander of their relief. Guards are not changed from one relief to another without proper authority.

3-39. They must memorize, understand, and comply with the general orders. In addition, guards must understand and comply with special orders applying to their particular posts, including the use of the countersign and parole word if they are in effect.

3-40. A guard will be posted at the guardhouse. While on post, the guard has direct access to the Commander of the Relief. The guard's general orders are the same as those for other guards.

FIXED POST SYSTEM

3-41. The fixed post system may be used to complement the patrol system. Normally, the fixed post guard changes daily, and guards are relieved at their posts every six to eight hours or as directed by the Commanding Officer. Usually, posts are covered on foot in this system. Entry control points, access gates and staff duty desks are examples of fixed guard posts.

3-42. The duties of all personnel in a fixed post system of interior guard duty are the same as above.

3-43. Normally, the relief(s) that are not on guard are the fixed post reserve. The reserve is large enough to meet any local emergency and is maintained at the guardhouse or close the command post. The Commanding Officer prescribes the strength and conduct of the reserve.

PATROLS

3-44. The patrol system is used in the main guard wherever practical and is most suitable when large areas are guarded. Motor transportation is used whenever possible. The activities of patrols are checked by time clocks or periodic reporting by radio, in person, or by other means, and by frequent inspections. If practical, patrols are quartered together, generally at the guardhouse, and communication is provided between patrols and the guardhouse.

3-45. Regulations for the duties, conduct, strength, and posting of the patrol elements of the guard are published by the Commanding Officer to suit local conditions.

3-46. The Commanding Officer determines the size of patrols. Certain key personnel may be detailed to guard duty permanently while the others may be detailed semi-permanently. Generally, each patrol consists of two guards.

3-47. The daily tour of duty for each patrol is normally from six to eight hours, and each relief is inspected before going on duty. The patrols move directly to their posts from the guardhouse. One patrol relieves another by meeting at a particular point at a prearranged time. The relieved patrol reports back to the guardhouse immediately.

3-48. A reserve large enough to meet any local emergency is maintained at the guardhouse. The Commanding Officer prescribes the strength and conduct of the reserve.

STAFF DUTY

3-49. The staff duty serves the same functions of the interior guard at a unit-specific level when designated by the installation or unit Commander. The staff duty functions as a fixed post with patrol duties when assigned. Commanders use the staff duty system to augment the interior guard. The staff duty is responsible for good order, discipline, and security of the unit area as well as acting as the representative of the command after normal duty hours. Normally, the staff duty will be relieved every 24 hours, or as directed by the unit Commander.

DUTY DESCRIPTIONS

3-50. The staff duty is comprised of the SDO, the SDNCO, and as many runners as necessary

Staff Duty Officer (SDO)

3-51. The SDO acts as the representative of the unit Commander after normal duty hours. He/she is responsible for the security of the unit area. The SDO:

- Ensures the security of sensitive areas within the unit boundaries. Such areas include arms rooms, ammunition storage areas and secure network access areas
- Notifies the chain of command of a serious incident.
- Ensures adherence to all unit, installation and Army policies and regulations.

Staff Duty Noncommisioned Officer (SDNCO)

3-52. The SDNCO is the primary assistant to the SDO in the conduct of staff duty. He/She manages the staff duty runners, and acts as the duly appointed representative of the command team after normal duty hours. The SDNCO:

- Ensures that the charge of quarters is performing his duties as directed.
- Ensures the security of sensitive areas within the unit boundaries. Such areas include arms rooms, ammunition storage areas and secure network access areas.
- Enforces good order and discipline within the unit boundaries.

Staff Duty Runner(s)

3-53. Staff duty runners are enlisted Soldiers used to perform all tasks that may take the SDNCO or SDO away from their fixed post. The staff duty runners can serve as patrols when needed and the SDNCO or SDO is not required by unit SOP the check a particular area. A staff duty runner:

- Patrols the unit area to ensure good order and discipline. Reports deficiencies to the SDO or SDNCO.
- Maintains the cleanliness of the staff duty area.
- Escorts personnel from outside of the unit such as maintenance workers or civilians. This is authorized by either the SDO or SDNCO.
- Allows authorized personnel into secure areas when authorized by the SDO or SDNCO

SPECIAL GUARD

3-54. Special guard are detailed when it is impractical to use members of the main guard to guard property or an area. They are governed by the regulations for guard on main guard duty.

3-55. Special guards protect vehicles, buildings, equipment, supplies and other property not protected by the main guard. They enforce special regulations in regard to the property or equipment being guarded.

3-56. Special guards receive their orders from the Commanding Officer, the area Commander (the OD and officers and NCO's of the guard when the special guard is part of the main guard), and the NCO of the special guard. Normally the special guard will be under the immediate control of their Commander.

3-57. The special guard, upon being posted, verifies all the equipment for which they are responsible, and, upon being relieved, gives that number to their successor.

3-58. Special guards are not employed for police duties at the guarded area except in an emergency.

3-59. Civilian guards are used when authorized by the Commanding Officer. They receive their orders and perform their duties as the installation Commander directs.

3-60. The NCO receives orders from his/her company Commander. When relieved, he turns over all orders to his successor. The NCO instructs the guards in their general and special duties, including safety procedures. The NCO of the special guard also:

- Exercises general supervision over the entire special guard.
- Ensures that the guardhouse is clean and orderly.
- Checks the equipment, and property which the special guard protects.
- Inspects the area for fire hazards and ensures that keys are available so that any vehicles in the guarded area may be moved in case of fire immediately upon going on duty.
- Examines all locks, windows, and doors; if any are found unsecured, the NCO will report that fact to the company Commander or staff duty.
- Posts and relieves each guard personally, taking care to verify the property responsibility of the guard who comes off post.
- Checks that the guard who goes on post knows the property for which they are responsible.
- Reports to the company Commander any unusual occurrence and any abuse of equipment or property in a prompt manner.
- Answers guard calls promptly.

- Ensures that all firefighting measures, as outlined in the SOP, are promptly carried out in case of a fire.
- Designates another member of the guard to take charge and assume responsibility for the post whenever it becomes necessary for the NCO to leave the post.

This page intentionally left blank.

Chapter 4

Exterior Guard

The conduct and actions of exterior guards are limited only by the desires and instructions of the Commanders and small unit leaders and by the training and initiative of the guards themselves. The situation and mission are the deciding factors when the Commander plans for the security of his unit and the actions of his exterior guards.

COMPOSITION

4-1. The composition of an exterior guard is unrelated to that of an interior guard. No Commanders are detailed for that specific duty. The guards are appointed or selected from small units and function under the control and supervision of their chain of command. The actions and responsibilities of the guards are prescribed by instructions from their leaders, SOPs, and by applicable doctrine.

4-2. Patrols may be used to cover an area not otherwise under surveillance by available manned or unmanned sensors or gaps between units. To avoid establishing a pattern of operation, these patrols operate at irregular intervals over a variety of routes.

4-3. All exterior guards must have an adequate communications system. Special orders or instructions govern the type of communications. These may include radio, digital command systems, wire, arm-and-hand signals, sounds, or any method specified by the Commander or other leaders.

RESPONSIBILITIES

4-4. A unit must be protected at all times from surprise. Exterior guards protect a unit from surprise and give the unit time to prepare to counter any threat. Guards must be alert for surprise by ground, airborne, and air attacks. Exterior guards can provide early warning of CBRN attack. If the unit is moving, security may vary from observation to the use of security patrols or small elements on the flanks. During short halts, guards, small security detachments, and forward patrols are used to provide all around security.

4-5. For stationary positions in deployed areas, unit Commanders use exterior guards to establish a surveillance system to operate day and night throughout the unit area. The Commander may use remote cameras, observation posts, patrols, unmanned aircraft systems (UAS), and any other available means. The guards may have any number of special devices to assist them in performing their duties. These may include CBRN detection devices, electronic detection devices, infrared or other night vision devices, trip flares and noisemaking devices or any other types of early warning devices.

GUARD IN HYBRID THREAT AREAS

4-6. A hybrid threat is the diverse and dynamic combination of regular forces, irregular forces, and/or criminal elements all united to achieve mutually benefitting effects (TC 7-100, *Hybrid Threat*). This demands Commanders and leaders exercise methodical supervision and checks on the exterior guard and overall security discipline. Frequently alternating patrol times and routes, relocation of observation posts, the effective use of UAS and changing routine security measures can prevent hostile forces from obtaining detailed and accurate information about the composition, habits, and location of the exterior guards.

4-7. Providing adequate and effective guards in hybrid threat areas is a difficult task. Properly training Soldiers in the current tactics that are being used increases the Soldiers' effectiveness in dealing with such threats. All members of the unit must be thoroughly briefed on known or suspected threats. The Commanders and guards must use all combat security measures when operating in these areas. Guards must be particularly alert when in seemingly safe areas, especially when in friendly areas.

4-8. The tour of duty for exterior guards may not be the same as for interior guards. Normally no guardhouse is used; the guards perform their duties and rest at the same location. When practical, guards operate in pairs or larger groups and rotate the watch and rest periods among themselves to ensure that the required number of guards are alert at all times.

Chapter 5

Guard Mounting

The guard mount is a time-honored tradition that continues to be relevant. It is a tool, through which, leaders can reinforce good order and discipline, standards and accountability. By conducting a guard mount leaders ensure that their Soldiers or Soldiers detailed to them are on time, ready and equipped to post the fixed posts or patrol. This ensures the Commander that the guards posted are ready to protect the safety and security of the personnel, equipment or sensitive area they are assigned to guard.

GENERAL

5-1. Guard mounting always is conducted by the CoG or the SoG if the Commander is absent. A guard mount is conducted prior to posting guards to ensure all personnel are present, alert, properly equipped, knowledgeable, and capable of assuming duty. In many regards the act of performing the guard mount correlates to the performance of the pre-combat inspections.

REQUIREMENTS

5-2. Uniform, arms, and equipment for guard mounts are prescribed by the Commanding Officer. If armed, guards must be qualified (or familiarized, if authorized by the Commander) with the weapon they use on guard duty.

FORMATION OF THE GUARD DETAIL

5-3. The first sergeants of the companies furnishing guard details form the guard detail in the company area. Each first sergeant verifies the detail to include verification that weapons qualification or familiarization requirements have been met, inspects it, replaces personnel who do not present a good appearance or have not qualified with their weapon, and order the senior Soldier to march the detail to the assembly area.

GUARD MOUNT (INSPECTION ONLY)

5-4. Guard mount may consist of only an inspection. This inspection normally is conducted in the vicinity of the guardhouse. The officers and NCOs of the guard are detailed for a specific duty by roster.

FORMATION OF THE GUARD

5-5. The SoG forms the guard by giving the command "**FALL IN.**" The Commander of the first relief falls in so that when their relief is formed at normal interval to the left, it will be three steps in front of and centered on the SoG. The second and third reliefs form behind the first relief, each Soldier covering the corresponding numbered Soldier in the first relief. Supernumeraries form to the left of the designated relief at normal interval. The SoG gives the commands, "*Inspection*, **ARMS**; *Ready*, *Port*, **ARMS**; *Order*, **ARMS**." Then he executes an about-face. (See figure 5-1.)

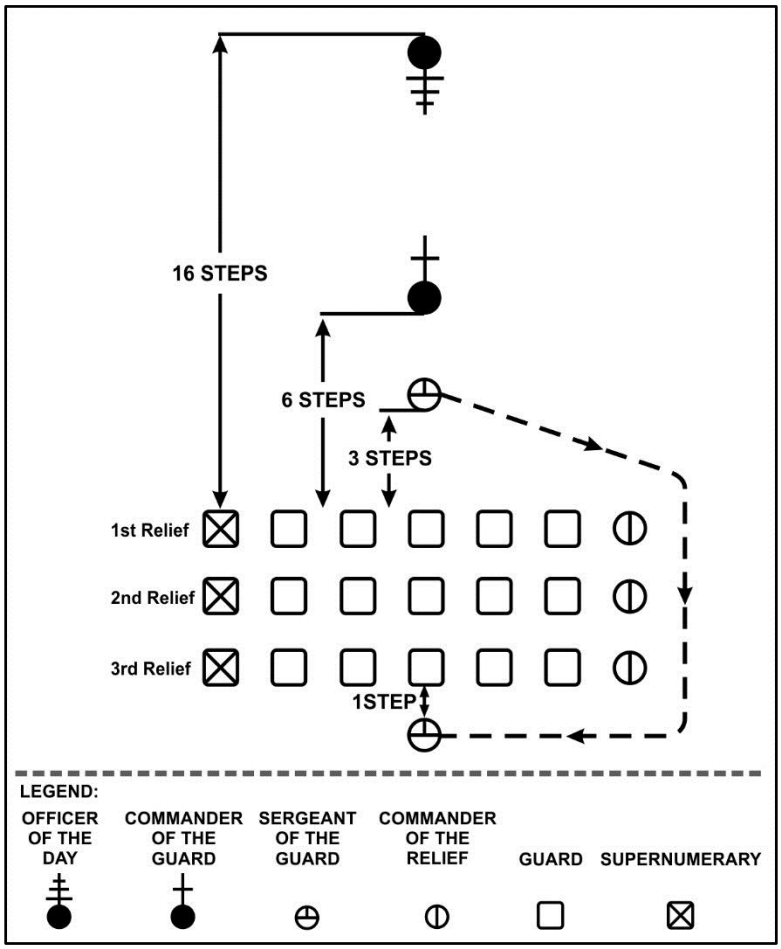

Figure 5-1. Formation of the guard

Note. If the Commander of the Guard is not to position, the SoG may execute an about-face and give the guards, "At, ease." Upon seeing the Commander of the Guard moving into position the SOG commands the guards to attention and to execute an about-face. The SoG remains at sling arms throughout the entire guard mount.

5-6. The Commander of the Guard takes his post six steps in front of and centered on the guard. The SoG renders the appropriate salute and reports, "Sir/Ma'am, all present," or "Sir/Ma'am, (so many) personnel absent." After the Commander of the Guard returns the salute, the SoG faces to the right in marching, marches around the right flank of the platoon and halts one step to the rear, centered on the guard, and executes a right face.

5-7. The Officer of the Day takes his post 18 steps in front of and centered on the guard. The Commander of the Guard executes an about-face, salutes and reports, "Sir/Ma'am, all present" or, "Sir/Ma'am, (so many)

personnel absent." The Officer of the Day returns the salute and gives the directive, "**PREPARE FOR INSPECTION**."

PREPARING FOR INSPECTION

5-8. On the directive "**PREPARE FOR INSPECTION**," the Commander of the Guard executes an about-face without saluting and gives the command, "*Open Ranks*, **MARCH**." The guards open ranks march as outlined in TC 3-21.5 *Drill and Ceremony*. After the guards have opened ranks the Commander of the Guard gives the command, "*Dress Right*, **DRESS**," aligns the formation, returns to his original position facing the guards and gives the command, "*Ready*, **FRONT**." He then conducts an about-face, salute, and say, "Sir/Ma'am, the guard is prepared for inspection." The Officer of the Day then inspects the guards. During the inspection the Officer of the Day order guards who are not satisfactory for guard to fall out to the rear of the formation and await further instructions from the SoG. When a Soldier is relieved the Officer of the Day gives the command, "**SUPERNUMERARY**." The supernumerary moves from its position to the post vacated. It takes its post by taking one step backward, facing to the right, and moving in the rear of the relief so that it will approach the vacated position from the rear. The supernumerary halts, executes a left face, moves into position, halts and immediately comes to inspection arms. The Officer of the Day inspects the supernumerary then proceeds with the rest of the inspection. After inspecting the guard the Officer of the Day and the Commander of the Guard return to their original positions. The Officer of the Day halts 18 steps in front of and centered on the guard. The Commander of the Guard stops six steps in front of and centered on the guard and executes a right face.

5-9. If an orderly is to be selected, the Officer of the Day announces the selection. The OD then directs, "**TAKE CHARGE OF THE GUARD**." Salutes are exchanged and the Officer of the Day departs.

Note. During the inspection the Officer of the Day may direct that the reliefs not being inspected be given at ease. In this case, the Commander of the Guard, upon completion of the inspection, calls the guards to attention while moving around the right flank of the formation.

5-10. The Commander of the Guard executes an about-face and commands, "*Close ranks*, **MARCH**." The guard closes ranks the same as in the platoon drill described in TC 3-21.5 *Drill and Ceremony*. The Commander of the Guard give the command, "**FALL OUT**." The guards move to where they are to be housed. The Commander of the first relief prepares their relief to be posted. The orderly, if one was selected, reports to the Commander of the Guard for instructions.

5-11. If no officer is detailed as Officer of the Day, the Commander of the Guard assumes those duties. If no Officer of the Day or Commander of the Guard is detailed, the SoG prepares the guard for inspection and inspects it. The SoG assumes the position of the Commander of the Guard in the absence of the Commander of the Guard.

FORMAL GUARD MOUNT

5-12. Formal guard mounting is held on the parade ground of the organization from which the guard is detailed. When the guard is detailed from more than one organization, it is conducted wherever the Commanding Officer directs. When an NCO commands the guard at formal guard mount, he takes the post of the Commander of the Guard and performs the duties prescribed for an officer.

FORMATION OF THE GUARD

Note. Formation of the guard during formal guard mounting follows the same procedures as inspection only.

5-13. If an officer has not been detailed as Commander of the Guard, the takes three steps forward and assumes the position of the Commander of the Guard.

5-14. When the Officer of the Day arrives, the Commander of the Guard salutes and reports, "Sir/Ma'am, all present," or, "Sir/Ma'am, (so many) personnel absent."

MARCHING TO CENTER

5-15. The Officer of the Day issues the command, "*Officer and noncommissioned officers center*, **MARCH**." At the command of **MARCH:**

- The Commander of the Guard marches forward and halts three steps in front of the Officer of the Day,
- The Commanders of the Reliefs march forward and execute column left without command when on a line three steps to the rear of the Commander of the Guard. The third relief Commander commands, Noncommissioned officers, HALT, when they are centered on the Commander of the Guard.
- The SoG moves from his position around the right flank of the formation by the most direct route to a position three steps behind the second relief Commander.
- Upon seeing the SoG in position, the third relief Commander commands, Right, FACE. . (See figure 5-2.)

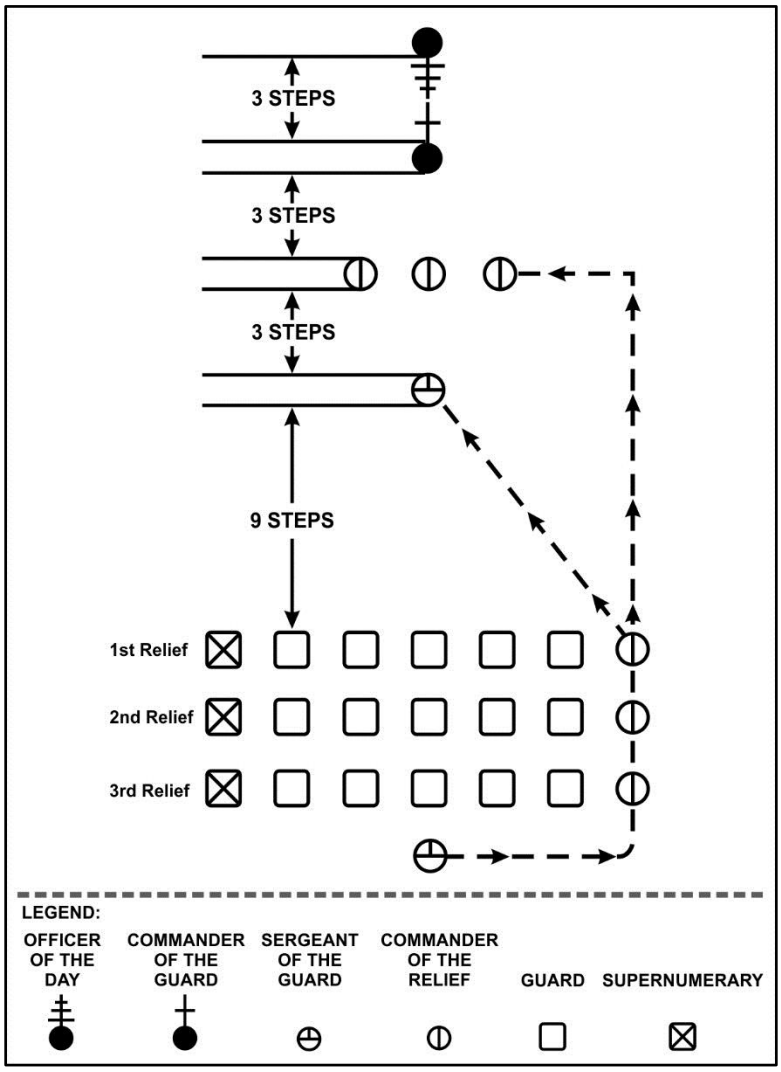

Figure 5-2. Marching to the center

Note. The Commanders of the Reliefs move at the order arms position if armed.

DESIGNATION OF THE GUARD CHAIN OF COMMAND

5-16. After the Commander of the Guard and the NCOs are in position the Officer of the Day marches forward, halts at normal distance in front of the Commander of the Guard, and directs, "**COMMANDER OF THE GUARD**." He then faces to the half left and moves by the most direct route into position in front of the right flank Commander of the Relief and directs, "**COMMANDER, THIRD RELIEF**." He then faces to the right in marching, takes two steps, halts, executes a left face and directs, "**COMMANDER, SECOND RELIEF**. He then faces to the right in marching, takes two steps, halts, executes a left face and directs, **COMMANDER, FIRST RELIEF**." He then faces to the right in marching and moves by the most direct route behind the Commanders of the Relief, halts in front of the SoG, executes a right face and directs, "**SERGEANT OF THE GUARD**." He then faces to the left in marching and moves by the most direct route around the right flank of the Commanders of the Reliefs to his original position, halts, executes a left face. (See figure 5-3.)

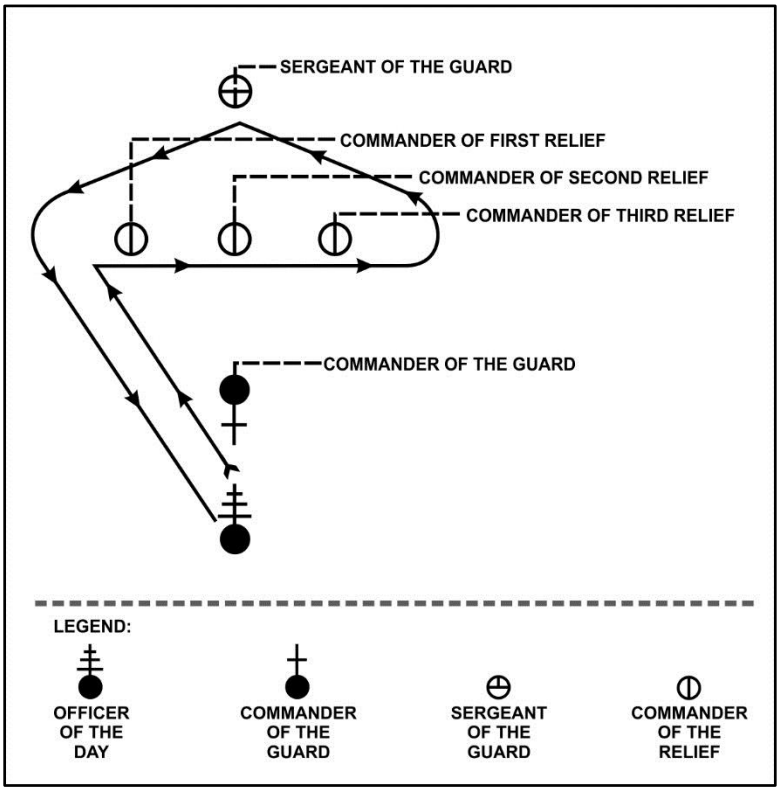

Figure 5-3. Designation of the guard chain of command

RETURN TO POSTS

5-17. The Officer of the Day gives the command, "**POST**." On this command, the Commander of the Guard and the SoG execute an about-face and immediately step off, returning by the most direct route to their original positions. The Commander of the Guard is six steps in front and centered, facing the guards. The SoG is one step behind, centered on the guards. At the same time the Commanders of the Relief execute a right face and immediately step off returning to their original positions by the same route used to come center. They execute the column movement without command and halt when they arrive at their positions without command. Upon arriving at his original position and seeing the SoG back in position, the first relief Commander commands, "*About*, **FACE**." The relief Commanders execute an about-face. At the same time the SoG executes right face. Upon seeing that all NCOs are back in position the Commander of the Guard executes an about-face. (See figure 5-4.)

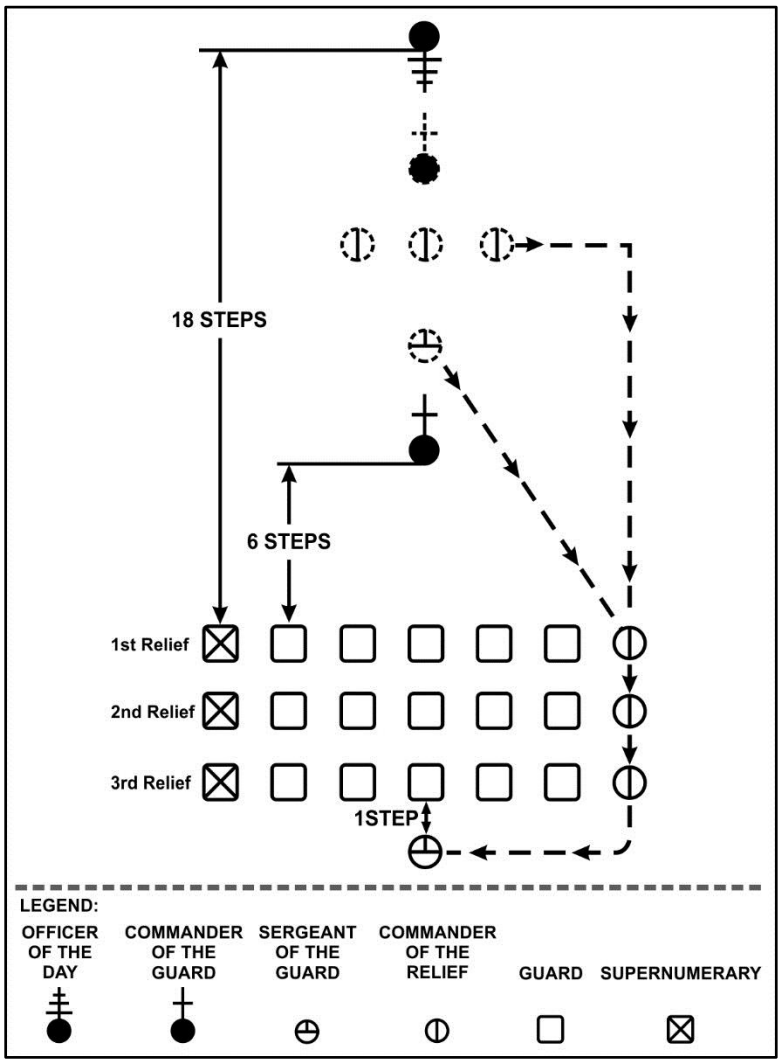

Figure 5-4. Return to posts

INSPECTING THE GUARD

5-18. The Officer of the Day directs, "**PREPARE FOR INSPECTION**." The Commander of the Guard, without saluting, executes an about-face and commands, "*Open ranks*; **MARCH**." Ranks are opened and aligned as described in platoon drill in TC 3-21.5.

Note. The Commander of the Guard precedes the Officer of the Day on the inspection.

5-19. The Officer of the Day orders guards who are not presentable for guard to fall out to the rear of the formation and await further instructions. Supernumeraries (if any) replace the personnel who have fallen out. (The Officer of the Day reports discrepancies in personnel to the Commanding Officer, or the Commander's representative, when reporting for duty.)

5-20. After inspecting the guard, the Officer of the Day and the Commander of the Guard resume their original positions. The Officer of the Day directs, "**MARCH TO THE GUARDHOUSE**." Salutes are exchanged. The Commander of the Guard executes an about-face and gives the command "*Close ranks*, **MARCH."** He commands, "*Right*, **FACE**," then positions himself one step in front of the second relief Commander. On the command of execution, the SoG faces to the left in marching and moves by the most direct route to his position one step to the rear of the last Soldier in the second relief.

FORMAL RELIEF OF THE OLD GUARD

5-21. The process for relieving the old guard is outlined in the paragraphs below.

ARRIVAL OF THE NEW GUARD

5-22. Before the new guard arrives the old guard forms in a line formation with two or more reliefs. The Commander of the old guard positions himself six steps in front of and centered on the guard. The new guard marches past (12 steps in front of) the old guard. When the new guard is six steps from the left flank of the old guard, the Commander of the new guard gives the command "*Eyes*, **RIGHT**." The Commander of the old guard executes an about-face and commands, *"Present*; **ARMS**." He faces back to the front and renders the proper salute. When the new guard has cleared the right flank of the old guard, the Commander of the new guard commands, "*Ready*, **FRONT**." The Commander of the old guard executes an about-face, commands, "*Order*, **ARMS**," and faces back to the front.

***Note*.** The guard relief of the old guard that is current on guard will stay at their posts until properly relieved by the new guard.

FORMATION OF THE OLD AND NEW GUARDS

5-23. After the new guard executes ready front, the Commander of the new guard commands, "*Right flank*; **MARCH**." On the command of execution, the new CoG steps out of the formation and positions himself six steps in the rear of and centered on his guard. He halts the new guard when it is on line with and six steps to the right of the old guard. Then he gives the commands, "*Order*, ARMS; *About*, FACE." The Commander of the new guard then gives the directive "**LEFT FLANK MAN, FIRST RELIEF, VERIFY SIX STEP INTERVAL**." The CoG the give the command "*Dress left*, **DRESS**." (See figure 5-5.)

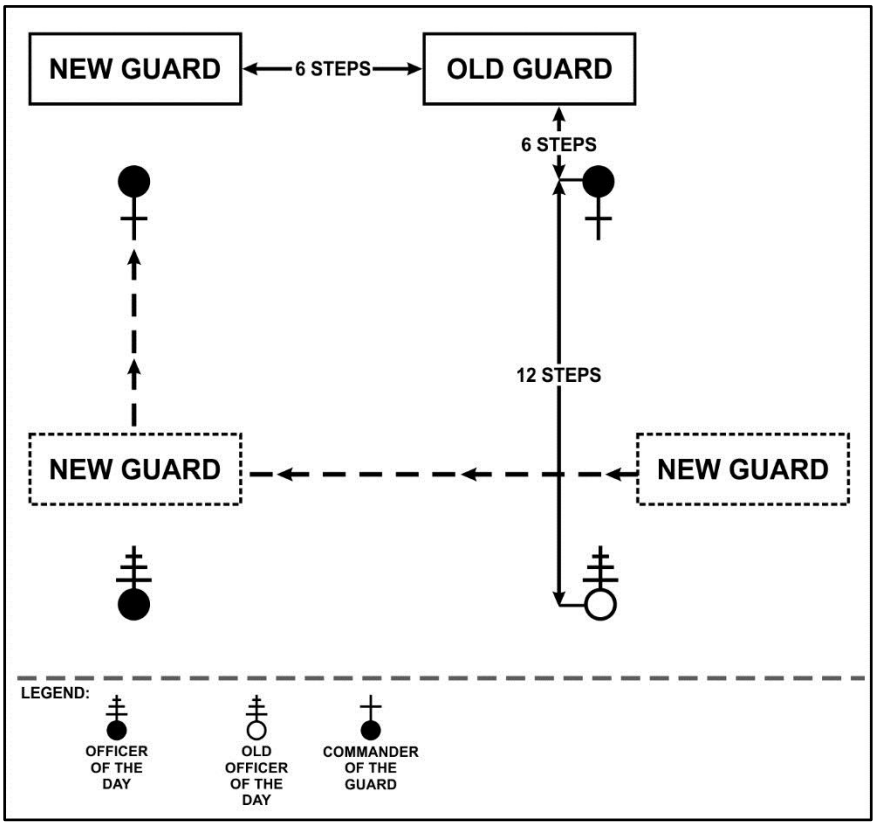

Figure 5-5. Formation of the guard at the guardhouse

5-24. At the command "**DRESS**," each Soldier turns his head and eyes to the left (except the left flank Soldiers who look to the front) raises his left arm laterally, shoulder high, fingers extended and joined, and touches the Soldier's shoulder to his immediate left. The left flank Soldier of the first relief is the base for this movement. The first relief obtains the exact interval. Other reliefs obtain an approximate interval and cover the same numbered Soldier to their front.

5-25. At the command "**DRESS**," the Commander of the old guard marches by the most direct route to the right flank of the guard, halts facing the rear on line and one step to the right of the first relief Commander. He faces to the right and align the guard as described in the platoon drill described in TC 3-21.5.

5-26. After aligning the last relief, the Commander of the Guard faces to the right in marching and moves to his original position, six steps in front of, centered on, and facing the guards. He commands, "*Ready*, **FRONT**." On the command of execution, each Soldier lowers his arm to his side and turns his head and eyes back to the front. The Commander of the Guard then executes an about-face.

FORMAL PRESENTATION OF NEW AND OLD GUARDS

5-27. After the new guard is in position, the Commanders of both guards execute an about-face and command, "*Present*, **ARMS**." Then they face each other and exchange salutes, face toward their respective guards, give the command, "*Order*, **ARMS**," and face back to the front.

5-28. When both have faced back to the front, the officers of the day face each other. The new Officer of the Day salutes the old Officer of the Day. After salutes have been exchanged, both officers of the day face their respective guards.

5-29. After both officers of the day have faced their guards, the new Officer of the Day give the directive "**POST THE FIRST RELIEF**." The new Commander salutes the new Officer of the Day, executes an about-face and gives the command, "**FALL OUT**." The guard reports to the guardhouse and the Commander of the first relief reports to the Commander of the Guard for instructions on posting his relief.

5-30. The old Officer of the Day gives the directive "**DISMISS THE GUARD**." The old Commander salutes the old Officer of the Day, executes an about-face, and give the command, "**REST**." He then contacts the new Commander and conveys any instructions and orders.

5-31. If the old guard was composed of Soldiers from only one company, the Commander of the old guard directs a NCO of the guard to march the guard to the company area and dismiss it. The NCO dismisses the guard by giving the commands, "*Inspection*, **ARMS**; *Ready, port*, **ARMS**; **DISMISSED.**"

5-32. If the guard was composed of Soldiers from more than one company, the old Commander instructs the senior member of each company to march the guard detail to the company area and dismiss it. The guard is dismissed as described in paragraph 5-28.

5-33. After the third relief of the old guard has been relieved, the Commander of the Relief reports to the Commander of the new guard. The Commander of the new guard inspects the relief and orders the relief Commander to march the relief to the company area and dismiss it. Salutes are exchanged. The relief is dismissed in accordance with the procedures described in paragraph 5-28.

FORMAL POSTING OF RELIEFS

5-34. Before a relief goes on post, the relief Commander assembles the guards and checks their appearances, fitness for duty, and the condition of their arms, if carried. He issues ammunition, supervises loading the weapons if required, and ensures that the guards understand their instructions. When the relief is large, it may be more convenient to form the relief, call the roll, and inspect the guards in ranks.

5-35. The relief Commander writes down the names of the guards, the numbers of their posts, the time they directed them to their post, and the time they report back to the guardhouse after being relieved. The Commander of the Guard keeps this record on file.

POSTING GUARDS

5-36. The relief Commander forms the relief by giving the command "**FALL IN**." The relief forms in two ranks, three steps in front of and centered on the relief Commander. The Commander of the old relief falls in at normal distance behind the first guard in the last relief. (See figure 5-6.)

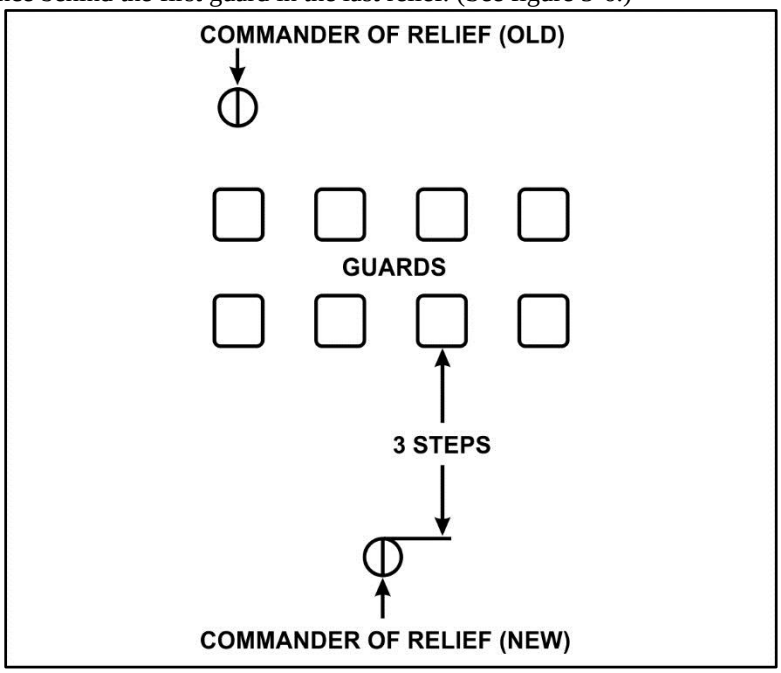

Figure 5-6. Posting guards

5-37. The Commander of the new relief gives the command "*Inspection*, **ARMS"** (if arms are to be loaded, he gives the necessary commands at this time and make certain that all safety procedures are carefully observed); "*Ready*, *port*, **ARMS**; *order*, **ARMS**."

5-38. He salutes and report to the Commander of the Guard, "Sir/Ma'am, the (first) relief is present and ready to be posted," or, "Sir/Ma'am (so many) personnel absent." If the Commander of the Guard is a NCO, the Commander of the new relief salutes and reports, "Sergeant, the (first) relief is present and ready to be posted" or, "Sergeant, (so many) men absent."

5-39. After the Commander of the Guard commands, "Post your relief," salutes are again exchanged. The Commander of the new relief commands, "Right, face; Right shoulder, arms (if appropriate);" and, "Forward march." he marches to the left of the last Soldier, left file, at normal interval while the Commander of the old relief marches on the right of the first Soldier, right file, at normal intervals.

POSTING DURING DAYLIGHT HOURS

5-40. During daylight hours, the Commander of the new relief halts his relief six steps from the old guard and gives the directive, "**NUMBER ONE** (Or the number corresponding the guard post)." The new guard (called) marches forward and halts three steps in front of the old guard. If armed with the rifle, carbine, or shotgun he executes port arms. Both relief Commanders advance and halt so that they are three steps apart and centered between the two guards. Then they execute a left (right) face and face each other. When the guard marches forward, the other guards behind him in the formation move forward to fill his position. (See figure 5-7.)

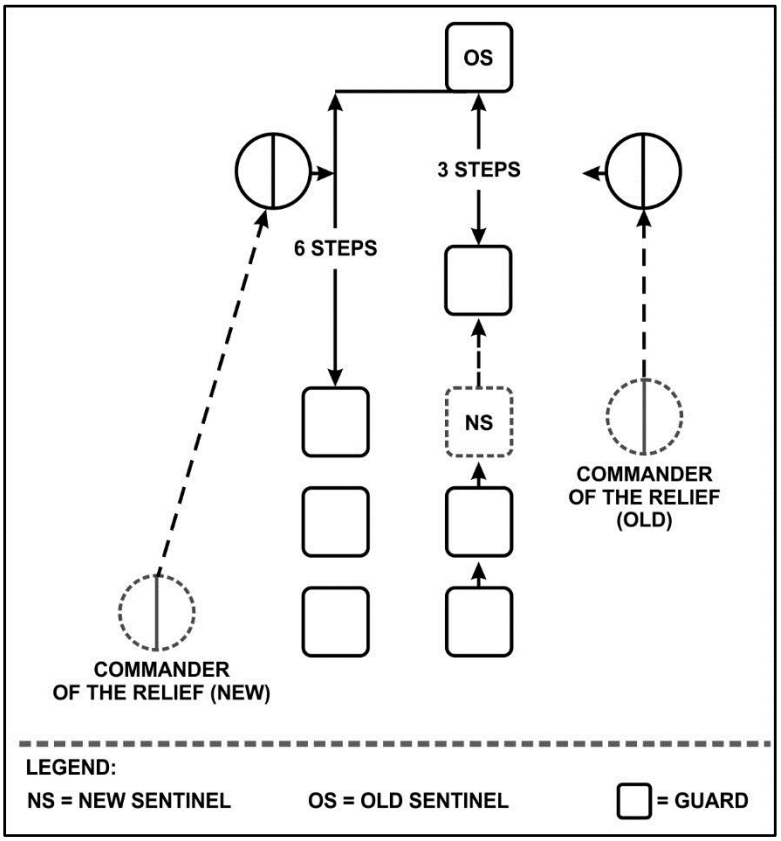

Figure 5-7. Posting and relieving guards (step one)

5-41. The Commander of the new relief gives the directive "**TRANSMIT YOUR ORDERS**," and the old guard transmits any changes in orders occurring during his tour or states, "Post and orders remain the same." The new relief Commander then asks the new guard, "Do you understand your orders?" If the new guard understands his orders he replies, "Yes, I do." If not, the new relief Commander clarifies the order or has the old guard provide a clearer explanation.

5-42. The Commander of the new relief gives the command "*Guards*, **POST**." On the command of execution, both guards resume right shoulder arms, or sling arms if appropriate, face the new command, and march backward until they are on line with the Commander of the old relief. (See figure 5-8.)

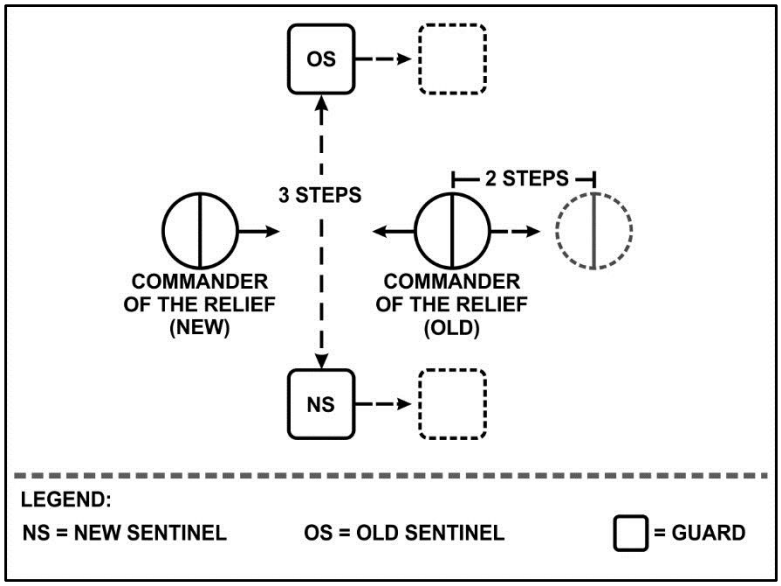

Figure 5-8. Posting and relieving guards (step 2)

5-43. The Commander of the new relief give the command "*Forward*, **MARCH**." The Commander of the old relief takes two steps backward to clear the old guards. The relief marches between the relief Commanders and the relief Commanders take their original positions as it passes them.

5-44. The old guard takes his place at the rear of the relief as it passes him.

5-45. The new guard stands fast until the relief has passed six steps beyond him and then he walks his/her post, or takes his prescribed position.

5-46. The Commander of the old relief takes command when his last squad has been relieved.

5-47. The Commander of the new relief has the guard transmit his orders then gives the command "*Relief Commanders*, **POST**." Both Commanders exchange positions by passing each other right shoulder to right shoulder, halting, and facing about. Both guards stand fast. (See figure 5-9.)

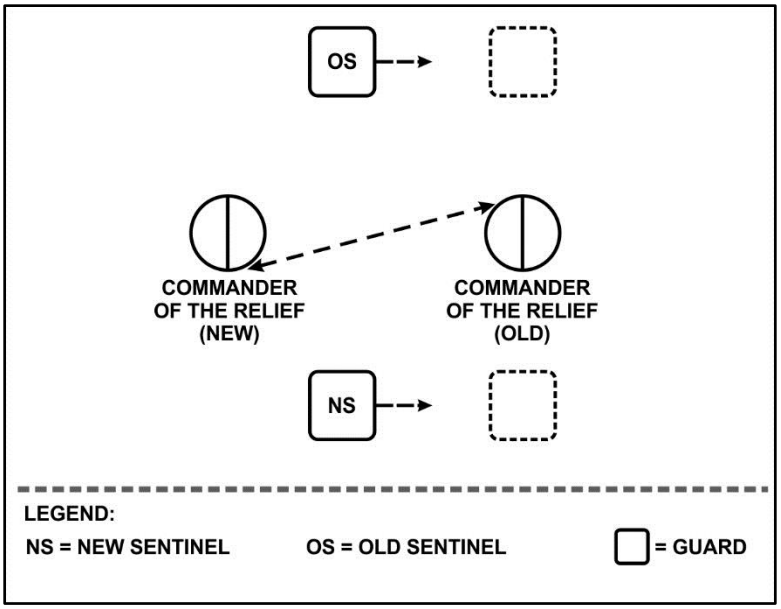

Figure 5-9. Posting and relieving guards (step 3)

5-48. After the relief Commanders face about, the Commander of the old relief commands, "*Guards*, **POST**." On the command of execution, both guards resume right shoulder arms, or sling arms if appropriate, face the Commander of the old relief, and march backward until they are on line with the Commander of the new relief.

5-49. The Commander of the old relief gives the command "*Forward*, **MARCH"** to the member of the old relief

5-50. The Commander of the new relief takes two steps backward to clear the old guard. The relief advances, the relief Commanders take their new positions, and the old guard takes his place at the rear of the relief as it passes him.

5-51. When the old relief returns to the guardhouse, the Commander of the old relief commands, "*Relief*, **HALT**" and the Commander of the new relief falls out and takes his post in the guardhouse.

5-52. The Commander of the old relief give the commands, "*Inspection*, **ARMS**" (If weapons are loaded, they are unloaded at this time and safety procedures are carefully observed.); "*Ready*, *port*, **ARMS**; **DISMISSED**." He reports to the Commander of the Guard that he has been relieved and his relief is present in the guardhouse.

5-53. If the old relief was the third relief of the old guard, the relief Commander dismisses his relief in accordance with paragraph 5-28.

POSTING DURING THE PRESCRIBED HOURS OF CHALLENGING

5-54. The hours of challenging are from sundown to sunrise, during times of limited visibility or as prescribed by the Commander. During the hours of challenging, the Commander of the new relief halts the relief when the guard challenges, "Halt!" "Who is there?" The Commander answers, "Relief." The guard commands, "Advance old relief Commander to be recognized." The old relief Commander advances until the guard commands, "Halt!" After the guard recognizes the relief Commander, the guard commands, "Advance relief." The new relief Commander marches the relief forward and halts it six steps from the old guard. The procedure for relieving the old guard is the same as in paragraph 5-40, except that when a new guard is armed with a pistol he comes to raise pistol after halting and when posted returns his pistol.

5-55. If transportation is utilized to post the relief, the guards are posted and relieved using the procedure described in the previous paragraphs. The old and new relief Commanders and the guard to be posted are the only members of the relief who dismount.

POSTING OTHER RELIEFS

5-56. To post a relief when there is no guard on the post, the Commander forms his relief as prescribed in paragraph 5-35.

5-57. He halts the relief six steps from the limits of the post concerned and directs "**NUMBER ONE**" (Or the number corresponding to the guard and the guard post). The guard called takes three steps forward, halts, executes port arms if armed with the rifle or carbine, and faces to the left. The Commander advances three steps in front of the relief, halts, and faces to the right, facing the guard. The guard, if armed with a pistol, executes raise pistol after facing to the left.

5-58. The relief Commander asks, "Do you understand your orders?" If he understands the orders the guard replies, "Yes, I do." If not, the Commander provides the proper explanation.

5-59. The relief Commander gives the command "**POST**." The guard executes right shoulder, sling arms, or return pistol, as appropriate, marches backward far enough to clear the relief, and walks his post when the relief is six steps beyond him.

5-60. The Commander commands to the relief, "*Forward*; **MARCH**," and resumes his original position as the relief passes him.

5-61. The Officer of the Day can authorize the reliefs to be divided into small groups, placing each group under a NCO for posting, have guards posted individually, or, use a combination of these two methods.

5-62. If guards are posted individually, the relief Commander orders, "Guard, take your post."

5-63. If guards are posted as a group, the relief Commander orders, "Take your posts." Each guard then proceeds directly to his post. Guards relieve each other at a specified point and transmit changes in orders.

5-64. A guard relieved individually proceeds directly to the guardhouse and reports to the Commander of the old relief. The last guard on a post from which he will not be relieved by another guard proceeds directly to the guardhouse at a designated time.

5-65. The relief may be posted by only the new relief Commander. The procedure is as described in paragraphs 5-55 through 5-63 except the old relief Commander is not present. The new relief Commander marches the old relief back to the guardhouse and dismisses it.

Appendix A

Escalation of Force

This appendix covers the escalation of force by those assigned to the performance of guard duty. Improper escalation of force can create serious incidents, which is why careful judgement must be exercised in deciding the level of force required to counter the actual or perceived threat.

A-1. Soldiers are regularly placed in situations where they must balance protection requirements and the need for restraint in dealing with personnel. Escalation-of-force (EOF) incidents in which unwarranted or perceived unwarranted lethal action is used can negatively affect short- and long-term military objectives. These negative impacts can adversely affect or halt progress in establishing and maintaining civil security and/or civil control. The failure to act when lethal force is warranted may lead to friendly casualties. Demonstrating appropriate EOF procedures begins with a mindset, guided by principles codified in the Army Ethic, which balances the use of nonlethal methods and systems with the necessary application of lethal force. When time and circumstances permit, Soldiers should attempt to use lesser means of force to respond to a threat.

A-2. Guards should be trained on graduated response measures when dealing with the public during potentially volatile situations. This training includes integration of nonlethal and lethal tactics, techniques, procedures, and equipment. It is imperative that all Soldiers assigned to guard duty, regardless of military occupational specialty, understand and correctly apply EOF procedures. EOF procedures enable alternatives to the use of lethal force.

A-3. Escalation of force is the series of sequential actions that begin with non-lethal force measures (visual signals: flags, spotlights, lasers, pyrotechnics) and may graduate to lethal measures (direct action: warning, disabling, deadly shots) to defeat a threat and protect the force. The escalation of force does not replace the rules of engagement; EOF measures complement and are implemented within the rules of engagement. The rules of engagement differ from graduated response applications of EOF; however, they are similar in concept. This similarity assists the detailed guard in understanding and implementing EOF.

A-4. Perceived hostile action or demonstrated hostile intent creates the necessity to respond to that threat. The guidelines for proportionality require the response to be reasonable in its intensity, duration, and magnitude, based on the totality of circumstances. Lethal force cannot be the default option. Other options, including military, nonlethal weapons and capabilities, must be available and used when appropriate. EOF guidelines direct the application of lower levels of force when they can achieve the desired effects without endangering the lives of Soldiers or non-combatants. Escalation of force procedures may be applied at static locations such as checkpoints and entry control points or while moving and engaging with populations and potential mounted or dismounted threats. EOF procedures do not limit the right of self-defense, including the use of deadly force. Commanders must ensure that personnel are trained properly in EOF procedures while on guard duty and are trained in the scenarios and methods of shaping the environment to gain time and space to reduce the requirement for split-second, life-or-death decisions.

Note. Commanders may, and should, use their assigned judge advocates to assist in personnel training of EOF. Additionally, there are valuable references on EOF, including the Center for Army Lessons Learned (CALL), www.call.army.mil,

---

This page intentionally left blank.

Appendix B

Countersigns and Parole Words

This appendix covers countersigns and parole words and their proper use. These are used to identify friend or foe and must be selected carefully in the performance of guard duties by assigned personnel.

B-1. The countersign is used in combat environments and, when necessary, in garrison when directed by the Commanding Officer. The parole word is used by inspecting officers or NCOs when inspecting the guards.

B-2. Any person in time of war who discloses the parole word or countersign to any person not entitled to receive it, shall be punished by death or such other punishment as a court-martial, in accordance with Article 101 of the Uniform Code of Military Justice. *(*Refer to MISC PUB 27-7, *Manual for Courts-Martial United States (2012 Edition)*, 5 April 2012 for more information.)

AUTHORIZATION

B-3. If a countersign and parole word are prescribed, they are devised by the highest headquarters within a zone or area. This authority may be delegated to subordinate units so they can designate a countersign or parole immediately, if it becomes necessary; however, these units immediately notify higher headquarters of such actions.

SELECTION

B-4. The choice of words or sounds is made carefully. Select words that are difficult for the enemy to pronounce and do not indicate the expected answer. Selected sounds should be distinctive and similar to those normally heard in the locality.

B-5. The use of the countersign is controlled rigidly and the initiative to use it rests with the challenger (guard). Mutual identification is essential; therefore, the person challenged should not give the password if he/she fails to recognize the challenge. The challenger (guard) uses only the challenge, never the password, except as prescribed in paragraph B -9.

B-6. Positive identification by the guard of all persons claiming authority to pass is the main consideration. Persons whose sole means of identification is the password are not allowed to pass. If there is a reasonable doubt, even if the password is given, the person should be apprehended and turned over to the Commander on the relief for further investigation.

USING COUNTERSIGNS

B-7. When a challenge and password are prescribed, the challenge is given by the guard after the person is advanced to be recognized. The password is given by the challenged person. The challenge and password are given in a hushed tone to prevent them from being overheard by others.

Example

A guard observes a group approaching his post. While the group is far enough away (for the guard to take effective measures should the group rush him) the guard calls, “Halt! Who is there?” After receiving an answer (such as “Sergeant Smith, Delta Company”) indicating the group is friendly and that it may be authorized to pass, the guard says, “Advance, Sergeant Smith, to be recognized.” When Sergeant Smith reaches a point where the challenge, spoken in a hushed tone, can be heard only by Sergeant Smith, the guard again says, “Halt!” Then he/she gives the challenge in a hushed tone (e.g. “Rainbow”). After receiving the correct password from Sergeant Smith (e.g. “Archer”) and otherwise satisfying himself that Sergeant Smith is authorized to pass, the guard says, “Advance, Sergeant Smith.” The guard then tells Sergeant Smith to bring up his/her personnel and identify them as they pass.

PAROLE WORDS

B-8. The Commanding Officer directs the use of a parole word. It is a secret word shared only with those persons entitled to inspect the guard and to Commanders and members of the guard. It is used as a check on the countersign.

B-9. The parole word is used by authorized persons to inspect the guards. When the inspector gives a guard the parole word, the guard gives the inspector both parts (the challenge and the password) of the countersign. The guard does not use the password at any other time. The parole word may be used before or after the hours of challenging; the inspector gives the parole word when they are close enough to prevent it from being overheard by unauthorized persons. Upon hearing the parole word, the guard knows that they are inspected by an authorized person. The guard then repeats both parts of the countersign (challenge and password).

B-10. When used during the hours of challenging, the inspector does not give the parole word until he/she is advanced to a position near the guard. After advancing to be recognized, the inspector uses the parole word and the guard gives him/her both parts of the countersign. If the guard challenges the inspector with the first part of the countersign, the inspector answers with the parole word instead of the password. The guard then gives the password to the inspector. If the inspector does not wish to reveal their official capacity while inspecting the guard they give an answer such as ‘‘friend’’ when halted by the guard.

Examples of using the parole word:

The countersign is “Rainbow-Archer” and the parole word is “Sunshine.” During daylight hours the Officer of the Day (or any person authorized to inspect the guard) approaches a guard. The guard salutes the officer at the appropriate time. When the Officer of the Day is close enough to the guard he/she gives the parole word by saying, “Sunshine,” in a low tone to prevent it from being overheard. The guard answers by saying, “Rainbow- Archer.” This ensures that the guard knows both parts of the countersign.

If the guard halts the Officer of the Day during the hours for challenging and receives the reply “friend,” then the guard says, “Advance, friend, to be recognized.” When the Officer of the Day is close enough to be recognized, the guard again halts them. The Officer of the Day then says, “Sunshine.” The guard answers, “Rainbow-Archer.” If the guard challenges the Officer of the Day with the challenge he/she says, “Halt, Rainbow.” The Officer of the Day answers, “Sunshine,” giving the parole word instead of the password. The guard then answers, “Archer.”

Appendix C

Challenge and Password

This appendix covers the methods for challenging individual unknown persons or groups of unknown persons. The Army currently employs technologies that enhance the individual Soldier's ability to identify between friendly and enemy in environments of limited visibility. These technologies may not be available to all entities that operate in the joint operating environment. The challenge and password is time tested approach to differentiate friend from enemy.

CHALLENGING ONE PERSON OR A GROUP

C-1. If a guard sees any individual on or near their post during the time for challenging, they position themselves so that they can control the situation. If possible, the guard should be out of sight when challenging. When the individual is about 30 steps, or at sufficient distance to allow the guard time to react, the guard assumes the correct challenge position and commands, "Halt!" When the individual halts, the guard asks, "Who is there?" The guard may advance toward the individual while challenging to put themselves in a better position. When the guard is in the best position to pass or apprehend the individual, he/she requires the individual to advance towards him, remain in position, or advance to a particular place, face toward the light, or to take any position necessary to determine whether the individual should be passed, denied, or turned over to the Commander of the Relief.

C-2. The guard permits only one member of a group to approach him/her for identification.

C-3. If individuals are in a vehicle, the guard proceeds as if they are on foot. If necessary to carry out their duty, the guard may have one or all of the passengers dismount.

C-4. After halting a group and receiving an answer indicating that it is authorized to proceed, the guard says, "Advance one to be recognized." After the guard has selected one individual to advance, the guard says, "Advance, Sergeant Smith," naming the individual (or group) allowed to advance. If the answer is, "Friends," the guard says, "Advance one to be recognized." After recognition they say, "Advance, friends."

C-5. The guard satisfies himself beyond a reasonable doubt that those challenged are who they represent themselves to be and that they have a right to pass. If the guard is not satisfied, they detain the person and calls the Commander of the Relief.

Note. A visual check of an individual's identification card, or authorized access badge is considered the best means of identification when doubt exists.

CHALLENGING TWO OR MORE PERSONS OR GROUPS

C-6. If two or more individuals or groups approach the guard's post from different directions at the same time, they are halted in turn and remain halted until advanced by the guard.

C-7. When two or more groups are halted at the same time, the senior group advances first.

C-8. A guard advances different individuals or groups with the following priority: Commanding Officer, Field Officer of the Day, Officer of the Day, officers of the guard, officers, patrols, reliefs, NCOs of the guard in order of rank, and friends.

C-9. If an individual or group has been advanced and is talking with the guard, the guard halts any other individual or group that may approach, but advances no one until the individual or group with whom they are talking leaves. The guard then advances the senior of the remaining group.

C-10. A guard always must be alert and never be surprised. A guard never permits two individuals or groups to advance to their post at the same time.

C-11. Confusing or misleading answers to a guard's challenge are unacceptable. However, the answer, "Friend," is not considered misleading and is the usual answer of an inspecting officer or patrol when they do not wish to reveal their official capacity.

Appendix D

Details and Rosters

This appendix covers some of the considerations when detailing personnel to perform guard duty to ensure the fairness of assigning guard duty and having the minimum impact on unit training.

DETAIL OF PERSONNEL

D-1. The personnel required for the fixed posts of the main guard are detailed daily. This also includes the use of staff duty and CQ duties when applicable. All duties are tracked and recorded on the DA Form 6 *Duty Roster* in accordance with AR 220-45 *Duty Rosters.*

DETAIL OF OFFICERS

D-2. An Officer of the Day and an officer of the guard are detailed with each main guard unless the Commanding Officer considers the guard so small that an officer of the guard is unnecessary. When necessary to efficiently supervise and control the Soldiers on a relief, a junior officer of the guard is detailed to assist the officer of the guard.

ROSTERS

D-3. A roster is a list of individuals or organizations available for a specific duty with a record of the duty each has performed.

D-4. For an accurate and equal distribution of guard duty, rosters are kept. Any method that ensures equitable performance of guard duty may be used provided it is not in conflict with AR 220-45 *Duty Rosters*.

D-5. Whenever possible a single organization should provide the guard. This prevents interference or conflict with unit training programs and provides for maintenance of unit integrity.

D-6. When a single organization, such as a battalion, provides the entire guard detail for a specific period, a guard roster showing only companies is kept by the sergeant major and no account is taken of a small difference in the strength of the companies. However, when the difference in strength of the various companies is large, considerations must be made to ensure the equitable performance of the guard duty while preventing conflicts with unit training. In this case, guards may be detailed from different companies within the battalion and detailed records must be kept.

D-7. Rosters for sergeants and relief Commanders of the guard provided by a single organization also are determined. When several organizations provide personnel for each guard:

- The adjutant keeps a roster of all officers of the day and officers of the guard by name.
- The sergeant major keeps a roster of all sergeants of the guard, relief Commanders, and Soldiers of the guard by number or organization.
- The first sergeants keep a roster of all sergeants of the guard, relief Commanders, and guards by name.

D-8. The methods of determining the number of guards that are due from several companies should be a function of their assigned personnel and the availability of personnel.

D-9. Other special guards are credited as the Commanding Officer directs.

This page intentionally left blank.

Glossary

The glossary lists acronyms and abbreviations with Army or joint definitions. Where Army and joint definitions differ, (Army) precedes the definition.

Acronym	Definition
CONUS	continental United States
CQ	charge of quarters
EOF	escalation of force
FOD	Field Officer of the Day
METT-TC	Mission, enemy, terrain and weather, troops and support available, time available, and civil considerations
NCO	noncommissioned officer
SDO	Staff Duty Officer
SDNCO	Staff Duty Noncommissioned Officer
SoG	Sergeant of the Guard
SOP	standard operating procedures
TC	training circular

This page intentionally left blank.

References

REQUIRED PUBLICATIONS

ADRP 1-02, *Terms and Military Symbols*, 16 November 13 January 2017.

Department of Defense Dictionary of Military and Associated Terms, 15 October 13 January 2017. See at http://ww.dtic.mil/doctrine/new_pubs/dictionary.pdf.

RELATED PUBLICATIONS

MISC PUB 27-7, *Manual for Courts-Martial United States (2012 Edition)*, 5 April 2012. See at http://www.lovc.gov/rr/frd/Military_Law/pdf/MCM-2012.pdf.

Most Army doctrinal publications and regulations are available at: https://armypubs.army.mil.

Other publications are available on the Central Army Registry on the Army Training Network, https://atiam.train.army.mil.

ARMY PUBLICATIONS

AR 220-45, *Duty Rosters*, 27 November 2012.

AR 600-25, *Salutes, Honors, and Visits of Courtesy*, 24 September 2004.

FM 27-10, *The Law of Land Warfare*, 18 July 1956

TC 3-21.5, *Drill and Ceremonies*, 20 January 2012.

TC 7-100, *Hybrid Threat*, 26 November 2010.

PRESCRIBED FORMS

This section contains no entries

REFERENCED FORMS

Unless otherwise indicated, DA forms are available on the Army Publishing Directorate (APD) website http://www.apd.army.mil..

DA Form 6, *Duty Roster*.

DA Form 2028, *Recommended Changes to Publications and Blank Forms*.

WEBSITES

Army doctrinal publications and regulations are available online at the following addresses:

Other publications are available on the Central Army Registry on the Army Training Network, https://atiam.train.army.mil.

This page intentionally left blank.

Index

Entries are listed by paragraph number unless mentioned otherwise.

C

charge of quarters, 1-14, 3-1, 3-6, D-1

Commander of the guard, 1-3, 2-2, 2-3, 3-1, 3-2, 3-3, 3-4, 5-1, 5-2, 5-3

E

exterior guard, 1-1, 4-1, 4-2

F

field officer of the day, 1-2, 1-3, 2-2, 3-2, 3-4, C-1

G

general orders, 1-1, 1-3, 2-4

guard, 1-1, 1-2, 1-3, 2-1, 2-2, 2-3, 2-4, 3-1, 3-2, 3-3, 3-4, 4-1, 5-7, 5-8, 5-9, 5-13, 5-14, A-1, B-1, B-2, C-1, D-1, 1-3

guard mount, 5-1, 5-3

I

interior guard, 1-1, 2-2, 3-2, 3-5, 4-1

M

main guard, 3-1, 3-5, D-2

O

officer of the day, 1-3, 3-2, 5-2, 5-3, 5-4, 5-6, 5-7, 5-9, D-1

R

relief, 1-3, 2-1, 3-1, 3-3, 3-5, 5-2, 5-7, 5-9, 5-13

relief Commander, 3-4, 5-6, 5-9, 5-10, 5-13

S

sergeant of the guard, 1-3

sergeant of the guard t, 3-3, 5-2

special guard, 1-1, 3-6, D-1

special orders, 1-1, 1-3, 2-1, 2-2, 2-3, 4-1

staff duty, 3-1, 3-2, 3-5, 3-6, D-1

This page intentionally left blank.

TC 3-22.6 (FM 3-22.6)
13 January 2017

By Order of the Secretary of the Army:

MARK A. MILLEY
General, United States Army
Chief of Staff

Official:

GERALD B. O'KEEFE
Administrative Assistant to the
Secretary of the Army
1701101

DISTRIBUTION:

Active Army, Army National Guard, and U.S. Army Reserve: To be distributed in accordance with the initial distribution number (IDN) 115887 requirements for TC 3-22.6.